DOE/EIS-0082-S2-SA-01

Supplement Analysis

Salt Processing Alternatives at the Savannah River Site

US Department of Energy
Savannah River Operations Office
Aiken, South Carolina

January 2006

SUPPLEMENT ANALYSIS FOR SALT PROCESSING ALTERNATIVES AT THE SAVANNAH RIVER SITE

INTRODUCTION AND PURPOSE

In October 2001 the US Department of Energy (DOE) issued a Record of Decision (ROD) for the *Savannah River Site Salt Processing Alternatives Final Supplemental Environmental Impact Statement* (SPA SEIS; 66 FR 52752, October 17, 2001). DOE determined that any of the alternatives evaluated could be implemented with only small and acceptable environmental impact, and announced its decision to implement the Caustic Side Solvent Extraction (CSSX) technology for separation of radioactive cesium (Cs) from SRS salt wastes. DOE explained that initial implementation of the CSSX technology would consist of designing, constructing, and operating a facility in S-Area. The facility would be designed to separate the low-activity fraction from the high-activity fraction of the salt waste. The high-activity fraction, including essentially the entire inventory of Cs stored in the F- and H-Area liquid radioactive waste tank farms, would be prepared for vitrification at the Defense Waste Processing Facility (DWPF) along with the sludge waste, and the low-activity fraction would be disposed of in the Saltstone Disposal Facility at the SRS.

DOE has initiated design of the Salt Waste Processing Facility (SWPF), which will house the CSSX technology. Now, using technologies described in the SPA SEIS, DOE is proposing to change the processing and disposition pathway for a specified fraction of the salt waste currently stored in the F- and H-Area tank farms. This proposal is called Interim Salt Processing[1]. When the SWPF becomes operational, the remaining salt waste would be processed through the SWPF (High Capacity Salt Processing[2]) using the CSSX technology as described in the SPA SEIS. Altering the processing pathway for a fraction of the salt waste prior to operation of the SWPF would enable DOE to continue to remove and stabilize the higher activity sludge waste by vitrification at DWPF. DOE did not foresee the need for the proposed Interim Salt Processing when the SPA SEIS was prepared, but DOE has since been able to process more sludge waste than expected.

DOE believes it should proceed with this interim approach because doing so would enable DOE to continue uninterrupted use of DWPF as well as use of SWPF at higher capacity as soon as it comes on line. This would allow DOE to complete cleanup and closure of the tanks several years earlier (about 2019 rather than 2023) than would otherwise be the case. That, in turn, would reduce the time during which the tanks – including some that do not have full secondary containment and have a known history of leak sites – continue to store liquid radioactive waste. Finally, Interim Salt Processing would make more tank space available for routine operation, thereby reducing the number of transfers among tanks and increasing the safety of operations.

---

[1] In DOE's Section 3116 Determination, Salt Waste Disposal at the Savannah River Site (DOE 2006), Interim Salt Processing is also referred to as a two-part process: 1) Deliquification, Dissolution, and Adjustment, and 2) Actinide Removal Process with Modular CSSX Unit.

[2] In DOE's Section 3116 Determination, processing through the SWPF using the CSSX technology is referred to a High Capacity Salt Processing.

Therefore, Interim Salt Processing will accelerate the reduction of potential risk to the environment, the public, and SRS workers.

The Council on Environmental Quality regulations for implementing the National Environmental Policy Act (NEPA), 40 CFR 1502.9(c), direct Federal agencies to prepare a supplement to an EIS when an agency "(i) makes substantial changes in the proposed action that are relevant to environmental concerns, or (ii) there are significant new circumstances or information relevant to environmental concerns and bearing on the proposed action or its impacts." DOE regulations for compliance with NEPA, 10 CFR 1021.314(c), direct that when it is unclear that a supplement to an EIS is required, DOE will prepare a supplement analysis (SA) to assist in making that determination.

The purpose of this SA is to evaluate the potential impacts associated with the proposed modified processing and disposition pathway and compare those impacts with those described in the SPA SEIS to determine if the SPA SEIS should be supplemented. Interim Salt Processing followed by High Capacity Salt Processing would result in processing and disposal of actinides in slightly higher concentrations than those evaluated in the SPA SEIS.

BACKGROUND

DOE published the SPA SEIS (DOE/EIS-0082-S2) in June 2001. The SPA SEIS assessed the environmental impacts of alternative technologies for separating the high-activity fraction from the low-activity fraction of the salt waste stored in underground tanks at SRS near Aiken, South Carolina.

Since initiating operations at SRS, the Tank Farms have received over 140 million gallons (Mgal) of liquid radioactive waste from the chemical separation processes in F- and H-Canyons associated with the reprocessing of spent nuclear fuel and the production of nuclear materials for weapons, medical applications, and National Aeronautics and Space Administration space missions. These operations resulted in the generation of large quantities of liquid radioactive waste which is currently stored onsite in 49 underground carbon steel waste storage tanks. Prior to transfer of the waste material from the F- and H-Canyons, chemicals (e.g., sodium hydroxide) are added to adjust the waste to an alkaline state to prevent corrosion of the carbon steel waste tanks. This chemical adjustment results in the precipitation of radioactive metals including strontium (Sr) and actinides (e.g., plutonium (Pu) and uranium (U)).These solids settle to the bottom of the waste tanks forming a layer that is commonly referred to as sludge. After settling of the solids has occurred, the salt solution (supernate) above this sludge layer is decanted off to another tank.

In order to maximize the space available in the tanks for receiving and storing additional waste, DOE's practice at SRS has been to use the Tank Farm evaporator systems to reduce the volume of the supernate and thus concentrate it. Although DOE no longer produces nuclear materials or the spent nuclear fuel that generated the original waste at SRS, additional waste is generated when legacy materials are processed, and DWPF operations also generate liquids with very low

radionuclide concentrations that, after evaporation, are stored in the liquid radioactive waste tanks. DOE is committed to closing the liquid radioactive waste tanks.

During the evaporation process two distinct phases are formed – concentrated supernate solution and solid saltcake (collectively called salt waste). The solid saltcake is composed predominately of nitrite and nitrate salts and contains relatively small quantities of radioactive material. Within the saltcake matrix, interstitial supernate liquids contain concentrations of radionuclides higher than in the saltcake, especially of Cs. Because of the relative high solubility of Cs, the predominant radionuclide present in salt waste, approximately 95 percent of the Cs in the salt waste is found in the concentrated supernate solution. As the result of the evaporation process over 140 Mgal of liquid waste originally received has been reduced to the present (as of December 1, 2004) volume of approximately 33.8 Mgal of salt waste. DOE estimates that an additional 41.3 Mgal of liquid waste would be received by the Tank Farms between December 1, 2004,[3] and the completion of salt waste processing. Evaporator operations have been extremely effective in minimizing liquid waste volume stored in SRS waste tanks, but because the majority of the waste has undergone evaporation and been concentrated as fully as possible using the available SRS equipment, significant further reductions via evaporation of the total waste volume currently stored are not possible.

In the SPA SEIS DOE discussed the issue of tank space, because it was recognized at that time that available tank space was critical to DOE's ability to continue to vitrify waste. At that time DOE estimated the SWPF would become operational in 2010. In the intervening years DOE, in an effort to reduce the risk of storing radioactive waste in liquid form, has accelerated vitrification, resulting in more vitrified waste but also generating additional salt waste requiring tank space, and accelerated the planned startup date of the SWPF to 2009. Recently, the start date for SWPF operations has been delayed (from 2009 to 2011) to allow for modification of the SWPF preliminary design to incorporate a higher degree of performance category (PC) in the confinement barriers necessary for worker protection during natural phenomena hazard events. If DOE is to be in a position to continue removal and vitrification of the high-activity sludge between now and the startup of the SWPF, including removing sludge waste from the tanks that lack full secondary containment, and to operate the SWPF efficiently (because tank space is required to prepare batches of feed for SWPF) after its construction is complete, DOE must proceed with interim processing. The only practical way DOE would be able to move forward with sludge vitrification without significant interruption and delay, and assure efficient operation of the SWPF, would be to use interim salt processing technologies to remove and dispose of a limited amount of the salt waste during this interim period. Otherwise, DOE would be forced to decrease, postpone, and eventually halt the on-going activities to remove and stabilize tank waste that currently are reducing risk to the occupational workers, the public, and the environment.

Existing Salt Processing Reviews

The environmental impacts of construction and operation of alternative technologies for salt processing were presented in the SPA SEIS. Four alternatives for processing salt waste were evaluated. Prior to sending the salt waste to any one of the alternative technologies for processing, the concentrated supernate solution and solid saltcake (including the interstitial

[3] This is the most recent projection, and is consistent with DOE's Section 3116 Determination (DOE, 2006).

liquid) would be combined. The four salt processing technology alternatives considered in the SPA EIS all include initial separation of actinides (including Pu and U) present in the salt solution by sorption on monosodium titanate (MST), followed by removal by filtration. The separated actinides would be sent to the DWPF for vitrification along with the sludge portion of the tank waste (that is, these wastes would not be processed using one of the alternative salt processing technologies). The remaining salt solution, which would have high concentrations of cesium but very low concentrations of actinides after the MST step, would be further processed by one of the four alternatives.

The alternatives described in the SPA SEIS differ in the approach each alternative would use for removal of radioactive Cs from the salt solution. For each alternative except Direct Disposal in Grout, most of the Cs would be extracted from the salt solution and incorporated into a vitrified waste form at the DWPF along with the sludge portion of the tank waste and the actinides extracted in the monosodium titanate step. The remaining low-activity salt waste stream (solution) would be sent to the Saltstone Production Facility where it would be combined with grout in a homogeneous mixture and sent to the Saltstone Disposal Facility (also referred to as the Saltstone Vaults) for disposal. Under the SEIS, all action alternatives but Direct Disposal in Grout would meet current permit conditions equivalent to Class A low-level waste. The Direct Disposal in Grout alternative would not meet the permit conditions due to high Cs concentrations. Under all action alternatives, the actinide concentration of the salt waste disposed in the Saltstone Disposal Facility would not exceed the Nuclear Regulatory Commission (NRC) concentration limits for Class A low-level waste, and would be about 10 nanocuries per gram (nCi/g).

DOE issued the Final SPA SEIS in June 2001 and in October 2001 DOE issued a Record of Decision selecting the preferred alternative described in the Final SPA SEIS, CSSX (with MST treatment for removal of actinides) as the treatment technology for salt waste. DOE is currently designing the Salt Waste Processing Facility (SWPF), which will house the CSSX and MST treatment technologies. Since issuing the SPA SEIS and ROD, DOE has further considered alternative approaches for the purposes contemplated in the ROD. In particular DOE believes it is vital to maintain sufficient tank space to continue to vitrify sludge waste in the DWPF in the interim before the SWPF is operational. Continuing to operate DWPF would allow DOE to remove and vitrify sludge waste, prepare salt waste for treatment and disposal, and empty waste tanks so they may be closed. All of these actions contribute to DOE's ability to continue to reduce the human health and environmental risk inherent in storage of high volumes of liquid radioactive waste.

The disposal of saltstone waste in the Saltstone Disposal Facility is subject to the requirements of Section 3116 of the Ronald W. Reagan National Defense Authorization Act for Fiscal Year 2005 (NDAA). NDAA Section 3116 authorizes the Secretary of Energy, in consultation with the NRC, to determine that certain waste from reprocessing is not high-level waste and that disposal in a geologic repository is not required, if it meets certain criteria. DOE prepared a Draft Section 3116 Determination for Salt Waste Disposal at the Savannah River Site (DOE, 2005) and consulted with the NRC pursuant to Section 3116 of the NDAA. Although not required by Section 3116, DOE made the Draft Section 3116 Determination available for public review concurrent with DOE's consultation with the NRC.

The NRC consultation process has been completed. On December 28, 2005, the NRC issued its "Technical Evaluation Report for the U.S. Department of Energy Savannah River Site Draft Section 3116 Waste Determination for Salt Waste Disposal" (TER). The TER presents information on DOE's salt waste processing strategy, the applicable review criteria, and the NRC's review approach, as well as the NRC's analysis and conclusions with respect to whether there is reasonable assurance that DOE's proposed approach can meet the applicable requirements of the NDAA for determining that waste is not high-level waste. As noted in its executive summary, "Based on the information provided by DOE to the NRC ..., the NRC staff has concluded that there is reasonable assurance that the applicable criteria of the NDAA can be met provided certain assumptions made in DOE's analyses are verified via monitoring."[4]

DOE considered the NRC's comments and the TER, as well as the public comments on the draft, before issuing the Section 3116 Determination for Salt Waste Disposal at the Savannah River Site (DOE, 2006). DOE also considered whether the comments on the Draft Section 3116 Determination for Salt Waste Disposal at the Savannah River Site (DOE, 2005) raise issues or provide information that would affect the environmental discussion in this Supplement Analysis and has determined that they do not.

In the Section 3116 Determination for Salt Waste Disposal at the Savannah River Site (DOE, 2006), DOE concluded that, as demonstrated in the Section 3116 Determination for Salt Waste Disposal at the Savannah River Site (DOE, 2006) and in consideration of DOE's consultation with the NRC, the solidified low-activity salt waste is not high-level waste and may be disposed of in the Saltstone Disposal Facility at SRS. DOE also stated that DOE will continue to take actions (such as sampling, monitoring, and ensuring vault inventory limits) to confirm the ongoing validity of the Determination and to explore additional actions to further enhance the protection of workers, the public, and the environment.

PROPOSED ACTION

DOE proposes to modify its implementation of the selected CSSX technology. DOE proposes to process the salt waste using a two-phase, three-part process. The first phase (herein referred to as Interim Salt Processing) would involve two parts to treat some of the lower activity salt waste: (1) beginning in 2006, processing of a minimal amount of the lowest activity salt waste through a process involving deliquification, dissolution, and adjustment (DDA); and (2) beginning in 2007, processing a minimal amount of additional salt waste with slightly higher activity levels using an Actinide Removal Process (ARP) and a Modular CSSX Unit (MCU), following deliquification, dissolution, and adjustment[5]. The second and longer term phase, herein referred to as High Capacity Salt Processing, is identical to the CSSX technology as presented in the SPA SEIS and would, beginning in 2011, involve the separation and processing of the remaining (and

[4] NRC also made a number of observations regarding DOE's analysis. DOE addressed several key NRC observations in the Section 3116 Determination for Salt Waste Disposal at the Savannah River Site (DOE, 2006).

[5] The numbers and percentages set forth in the in this SA are either rounded numbers and percentages or are DOE's best estimates at this time. The numbers, percentages, and dates in this SA should be viewed as approximate numbers, percentages, and dates.

by far the majority) of the salt waste using the Salt Waste Processing Facility (SWPF) (augmented as necessary by ARP). (Proposed volumes are presented in a later paragraph in this SA.) This second phase would begin as soon as SWPF is constructed, permitted by the State of South Carolina, and becomes operational. The first, interim processing phase would cease at that time (except ARP could be used as necessary to augment SWPF) or sooner, when processing of the defined volume of waste suitable for Interim Salt Processing was complete.

The start date for SWPF operations has been delayed (from 2009 to 2011) to allow for modification of the SWPF preliminary design to incorporate a higher degree of performance category (PC) in the confinement barriers necessary for worker protection during natural phenomena hazard events. The Defense Nuclear Facilities Safety Board initially identified concerns related to the PC designations of the SWPF in August, 2004. DOE agreed in November, 2005, to modify the SWPF design after extensive analysis and review, resulting in an approximate two year delay in the planned startup of SWPF. DOE anticipates that it will continue to explore possible ways to improve the schedule for design and construction of the SWPF. It remains DOE's goal to complete processing of salt waste through the SWPF by 2019 although this date may need to be modified in the future. Despite this projected delay, DOE will not increase the quantity of waste (total curies) to be disposed of in the Saltstone Disposal Facility, nor increase the quantities (curies) processed with interim processes or SWPF from those described here and in the Draft Section 3116 Determination for Salt Waste Disposal at the Savannah River Site (DOE, 2005) and Section 3116 Determination for Salt Waste Disposal at the Savannah River Site (DOE, 2006). Therefore, the date change does not affect the analyses in the Section 3116 Determination for Salt Waste Disposal at the Savannah River Site (DOE, 2006), its supporting documents, or the NRC consultation. The modified schedule is reflected in the Section 3116 Determination for Salt Waste Disposal at the Savannah River Site (DOE, 2006). However, the technical and programmatic documents that are referenced by the Section 3116 Determination for Salt Waste Disposal at the Savannah River Site (DOE, 2006) have not been updated to reflect this new date because the schedule change did not occur until after those documents were completed.

Figure 1 shows the facilities and processes involved in liquid radioactive waste processing as described in the SPA SEIS and as proposed for Interim Salt Processing. Table 1 lists and describes the facilities and processes discussed in the SPA SEIS and in this SA[6].

[6] Figure 1, Table 1, and the text of this SA use Ci/gal for Cs concentrations and nCi/g for actinide concentrations. This is conventional usage, and conforms to use in regulatory standards.

Figure 1: Proposed Salt Processing Flow Path and Quantities
(Taken from the Section 3116 Determination for Salt Waste Disposal at the Savannah River Site)

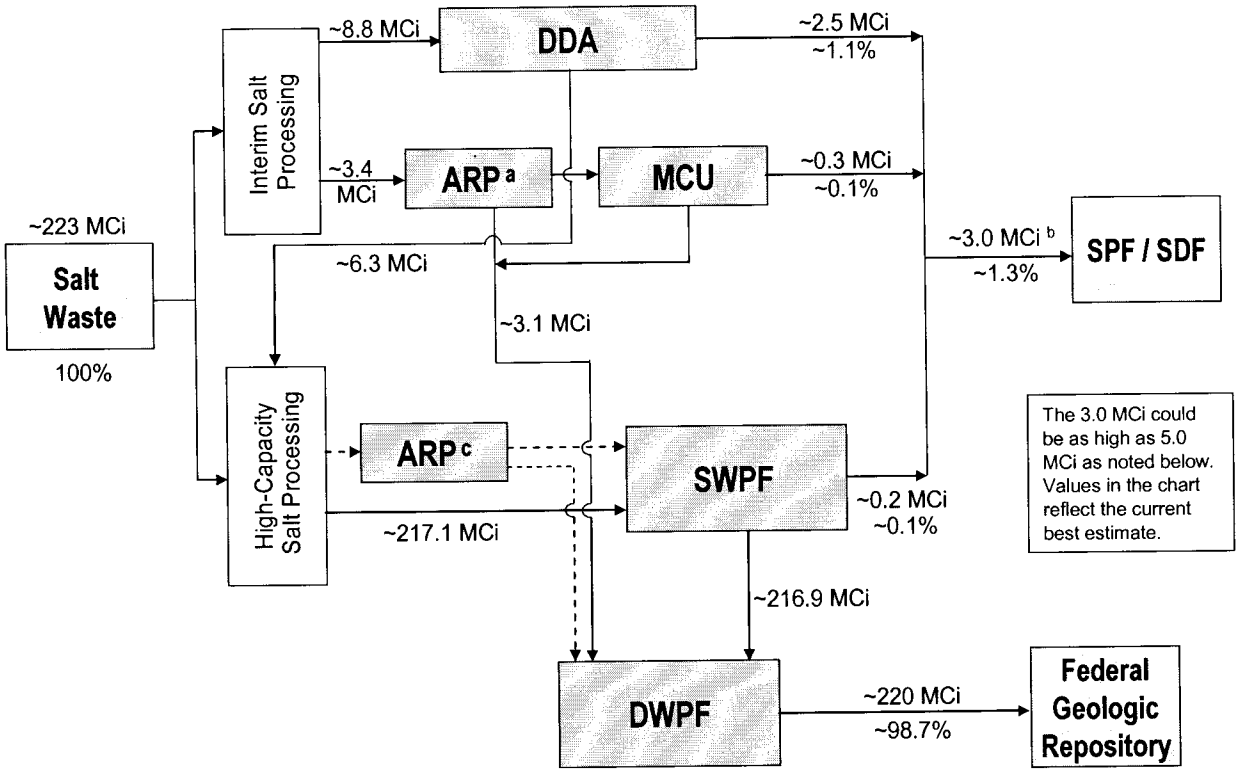

a Prior to treatment in ARP/MCU, all saltcake waste will have undergone DDA.
b Due to the uncertainty associated with the current characterization of the saltcake waste, the actual curie content of this material may be as high as 5 MCi and the percentages would change accordingly. Curie numbers include daughter products of Cs-137 and Sr-90.
c The dotted lines above signify that the ARP facility will have the capability to supplement the actinide removal capacity of SWPF if required.

Table 1. Liquid Radioactive Waste Processing Facilities and Processes

SPA SEIS Name	Supplement Analysis Name	Facility or Process Description for the Proposed Processing and Disposition Pathway
Caustic Side Solvent Extraction (CSSX) Facility	Salt Waste Processing Facility, using CSSX Technology	• Facility and processes described in the SPA SEIS. • Design is ongoing. • Would operate from 2011 until salt waste processing is completed. • Would process about 217.1 MCi of salt waste, primarily Cs. • Input waste streams from waste tanks. • Output waste stream to Saltstone Production Facility is anticipated to be below Class A concentration limits for Cs and actinides and would add less than 0.2 MCi (primarily Cs) to the Saltstone Disposal Facility inventory until salt waste processing is completed. • Output waste stream to DWPF would contain about 216.9 MCi, primarily Cs, over the operating life of the facility.
Waste Batch Preparation	Deliquification, Dissolution, and Adjustment (DDA)	• The DDA process would be used from 2006 until the time SWPF begins operation. DDA will cease after processing 5.9 Mgal of existing salt waste and 1.0 Mgal of future-generated salt waste. • No new facilities would be required. Necessary equipment (pumps, transfer jets) would be installed in the waste tanks. • DDA would be a new process. Dissolution and adjustment were described in the SPA SEIS, but deliquification was not. • Deliquification would include removal of supernate and interstitial liquid from salt waste tanks to another tank for storage until processing in SWPF or DWPF directly. • Dissolution would be dissolving the saltcake remaining in the tank after deliquification. • Chemistry adjustments would be made, if necessary, to ensure the salt solution stream (dissolved saltcake) conforms to the Saltstone Production Facility processing parameters. • The disposition of approximately 240,000 gallons of relatively low-activity salt solution currently stored in Tank 48 is included under the DDA process. DOE proposes to process this unique stream without removal of radionuclides by combining the stream with another salt waste stream, proposed to be the low-activity liquid recycle waste stream from DWPF.
Actinide Removal Technology	Actinide Removal Process (ARP) (modified existing SRS facilities 512-S and 241-96H)	• The ARP and MCU together constitute the processes described as the Pilot Plant in the SPA SEIS. The ARP provides the separation of actinides by monosodium titanate and filtration, common to all alternatives in the SPA SEIS. • The ARP would operate from 2007 until 2011 when the SWPF becomes operational. • The ARP could also provide additional actinide removal capability to supplement the capability of the SWPF when it comes on line in 2011. DOE will evaluate the need for the additional actinide removal capability provided by ARP closer to the time of startup of the SWPF when the expected processing rates are better known. • ARP would treat input waste streams containing about 3.4 MCi (primarily actinides and Cs), to remove actinides. • The ARP would operate in parallel with the MCU to remove actinides (ARP) and Cs (MCU). A resultant effluent stream with a total of about 3.1 MCi would be sent the DWPF, and a second resultant effluent stream with a total of about 0.3 MCi at a concentration of 0.2 Ci/gal or less, would be sent to the Saltstone Production Facility.

SPA SEIS Name	Supplement Analysis Name	Facility or Process Description for the Proposed Processing and Disposition Pathway
Cesium Removal Technology	Modular CSSX Unit (MCU)	• The ARP and MCU together constitute the processes described as the Pilot Plant in the SPA SEIS, and the MCU represents the CSSX technology on a small scale. • The MCU would operate from 2007 until 2011 when the SWPF becomes operational. • The MCU would utilize the CSSX technology to remove cesium from an input waste stream containing about 3.4 MCi (primarily actinides and Cs). • The MCU is being constructed in the cold feed area of the former In-Tank Precipitation facility. • The MCU would operate in series with the ARP to remove actinides (ARP) and Cs (MCU). A resultant effluent stream with a total of about 3.1 MCi would be sent the DWPF, and a second resultant effluent stream with a total of about 0.3 MCi at a concentration of 0.2 Ci/gal or less, would be sent to the Saltstone Production Facility.
Saltstone Manufacturing Facility	Saltstone Production Facility	• The Saltstone Production Facility would receive treated, low-activity salt waste, and combine it with grout. The resulting homogeneous mixture would be sent to the Saltstone Disposal Facility. • The Saltstone Production Facility would operate from 2006 until salt waste processing is completed. • From 2006 until the SWPF is operational, the Saltstone Production Facility would receive input waste streams totaling about 2.8 MCi (primarily Cs, but including actinides) that have been treated using the DDA process alone (0.2 Ci/gal Cs with about 41 nCi/g actinides) or followed by treatment in the ARP and MCU facilities (less than 0.1 Ci/gal Cs and about 10 nCi/g actinides). • The Saltstone Production Facility has been modified to address process problems and provide adequate worker protection for input waste streams with concentration of about 0.2 Ci/gal, compared to concentrations of about 0.1 Ci/gal originally planned and described in the SPA SEIS. • From 2011 until salt waste processing is completed, during operation of SWPF, the input waste stream from SWPF would total about 0.2 MCi (primarily Cs), and would have a concentration of about 0.1 Ci/gal or less.
Saltstone Disposal Facility	Saltstone Disposal Facility	• The Saltstone Disposal Facility would operate from 2006 until salt waste processing is completed. • The Saltstone Disposal Facility would receive a homogeneous mixture of low activity salt waste and grout from the Saltstone Production Facility. • From 2006 until the SWPF is operational, the Saltstone Disposal Facility would receive input waste streams totaling about 2.8 MCi (primarily Cs) that have been mixed with grout in the Saltstone Production Facility following treatment using the DDA process alone or followed by treatment in the ARP and MCU facilities. The actinide concentration in the disposed waste treated by DDA alone would be about 41 nCi/g from 2006 until 2011; waste treated by the ARP and MCU facilities following DDA treatment would have a concentration of less than 0.1 Ci/gal and about 10 nCi/g actinides. • From 2011 until salt waste processing is completed, the Saltstone Disposal Facility would receive input waste streams totaling about 0.2 MCi (primarily Cs) that have been mixed with grout in the Saltstone Production Facility following treatment in the SWPF. The actinide concentration in the disposed waste would be about 10 nCi/g from 2011 until salt waste processing is completed.

SPA SEIS Name	Supplement Analysis Name	Facility or Process Description for the Proposed Processing and Disposition Pathway
Defense Waste Processing Facility (DWPF)	Defense Waste Processing Facility (DWPF)	• DWPF would operate as described in the SPA SEIS. • Salt waste processing, from 2006 through salt waste processing is completed, would result in sending about 220 MCi of salt waste (about 216.9 MCi from SWPF and about 3.1 MCi from DDA, ARP MCU), primarily Cs and actinides, to DWPF for vitrification. • Using the CSSX process described in the SPA SEIS (operating from 2010 until 2023) about 223 MCi would be sent to the DWPF.

About 33.8 Mgal of salt waste are currently stored in underground waste storage tanks at SRS. This waste, along with future liquid waste forecasted to be sent to the tank farms, would be processed through DDA, ARP/MCU, and the SWPF. DOE estimated that an additional 41.3 Mgal of unconcentrated salt waste would have been received by the Tank Farms between December 1, 2004, and the completion of salt waste processing.

After both liquid removal by processing through the Tank Farm evaporator systems and later additions of liquid for saltcake dissolution and chemistry adjustments required for processing, approximately 84 Mgal of salt solution (5.9 Mgal existing salt waste through DDA process, 1.0 Mgal future salt waste through the DDA process, 2.1 Mgal existing and future salt waste through ARP/MCU, 69.1 Mgal existing salt waste through SWPF, and 5.9 Mgal future salt waste through SWPF) would be processed by Interim Salt Processing and the SWPF resulting in 168 Mgal of grout output from the Saltstone Production Facility to be disposed of in the Saltstone Disposal Facility.

In terms of curies, as shown in Figure 1, implementation of Interim Salt Processing followed by use of the SWPF for High Capacity Salt Processing would result in disposal of 3.0 to 5.0 million curies (MCi), with the majority (about 2.8 MCi of 3.0 MCi) resulting from the proposed Interim Salt Processing, in the Saltstone Disposal Facility. This represents 1.3 to 2.2 percent of the approximately 223 MCi in the salt waste. DOE's current estimate is that 3.0 MCi, or 1.3 percent of the total, would be disposed of in the Saltstone Disposal Facility, and 3.0 MCi is used in this document. The higher number of 5.0 MCi represents uncertainties in the radiological characterization of the salt waste. Because Cs constitutes the majority of these curies, and the SPA SEIS evaluated the impacts of processing and disposing of 160 million curies (the Direct Disposal in Grout alternative), these uncertainties do not affect DOE's assessment of whether or not the proposed salt processing program represents new circumstances or information possibly requiring a supplemental EIS.

Deliquification, Dissolution, and Adjustment

The DDA process would be the first interim process used and would be used to process some of the lowest activity salt waste from 2006 until 2011 when the SWPF becomes operational. The DDA process would also be used to prepare waste feed streams for the ARP and MCU and would operate in parallel with those facilities. While the SWPF process described in the SPA SEIS involves creating homogeneous batches of salt waste as feed for the SWPF, the DDA

process would segregate supernate and interstitial liquid from saltcake in order to send the dissolved saltcake waste with low curie content directly to the Saltstone Production Facility, where it would be mixed with dry chemicals to form an homogeneous grout mixture, and sent to the Saltstone Disposal Facility. Segregated saltcake waste with slightly higher curie content would be prepared for processing through the ARP and MCU, and waste with still higher curie content would be stored for processing in the SWPF when it comes on line in 2011. The segregation process would take place within individual liquid radioactive waste tanks. The dissolution and adjustment aspects of the DDA process are part of the feed preparation actions described in the SPA SEIS. Deliquification to segregate higher-activity salt waste was not described in the SPA SEIS. The DDA process requires no new facilities or construction.

The DDA process would involve: 1) removing the supernate from above the saltcake; 2) extracting interstitial liquid from within the saltcake matrix; 3) dissolving the saltcake and transferring the resulting salt solution and any materials in suspension to a settling tank; and 4) transferring the salt solution to the Saltstone Production Facility feed tank where, if required, the salt solution would be mixed with other Tank Farm waste to adjust batch chemistry. Chemistry adjustment may be required to ensure the salt solution feed stream meets processing parameters for the Saltstone Production Facility. Supernate and interstitial liquid segregated and removed from tanks in steps 1 and 2 would be stored in another tank for processing in the SWPF when it comes on line in 2011.

Because of the relatively high solubility of Cs, about 95 percent of the Cs-137 in the salt waste is found in the supernate and interstitial liquid, which will be processed through the SWPF. Cs-137 is the predominant radionuclide found in salt waste. The supernate and interstitial liquid segregated during the DDA process would be transferred to another liquid radioactive waste tank and stored for future processing through the SWPF. The waste stream resulting from saltcake dissolution sent to the Saltstone Disposal Facility using the DDA process would have a curie concentration of about 0.2 Ci/gal, and would total about 2.5 MCi. The waste stream would also have an actinide concentration of about 41 nCi/g. The DDA process is described in greater detail in DOE (2006).

DOE also includes the disposition of approximately 240,000 gallons of relatively low-activity salt solution currently stored in Tank 48 under the DDA process (i.e., in the amounts identified in the section above). This waste stream contains approximately 19,000 Kg of potassium and cesium tetraphenylborate (TPB) salts generated during an earlier unsuccessful effort to prepare salt waste for disposal, known as the In-Tank Precipitation process, which operated from 1995 through 1996. The organic nature of the TPB-laden salt waste requires that the waste stream be managed separately from other tank waste due to its potential to decompose into benzene, a flammable material. DOE proposes to process this unique stream without removal of radionuclides that is, without use of the ARP/MCU process described below. DOE proposes to combine the stream with another salt waste stream, proposed to be the low-activity liquid recycle waste stream from DWPF[7]. The two waste streams would be aggregated to ensure that processing limits of allowable organic content at SPF would not be exceeded. The aggregated low activity waste stream would then be transferred to the SPF feed tank. The volumes and

[7] DWPF operations generate a liquid waste stream, primarily water, which contains low concentrations of radionuclides. This stream is sent to evaporators to concentrate it in order to conserve tank space.

radioactive content of this unique waste are included in the DDA quantities noted throughout this document.

Actinide Removal Process and Modular CSSX Unit

In 2007, ARP and MCU operations would be initiated to process slightly higher activity salt waste (that may not meet the Saltstone Disposal Facility waste acceptance criteria without further processing) than that sent directly to the Saltstone facility following segregation using the DDA process alone. ARP and MCU would operate downstream of the DDA process using processes described in the SPA SEIS (MST treatment and CSSX), the same technologies that will be incorporated in the SWPF which will process about 98.7 percent of the 223 million curies in salt waste.

As currently planned the ARP would be completed and ready for operation in 2007. Because this facility would be available several months earlier than the MCU, DOE is considering whether to operate ARP separate from MCU for a short period of time. This would allow for the removal of additional actinides from a quantity of salt waste that DOE had intended to treat only with DDA. This separate ARP operation would reduce the number of curies of actinides disposed of in the Saltstone Disposal Facility. The ARP would also have the ability to provide additional actinide removal capability to supplement the capability of the SWPF when it comes on line in 2011. DOE will evaluate the need for the additional actinide removal capability provided by ARP closer to the time of startup of the SWPF when the expected processing rates for the SWPF are better known.

ARP would use existing facilities at SRS, Buildings 512-S and 241-96H, which DOE is modifying, to remove actinides from salt waste (description under Facility Modifications below). During the operation of ARP, waste segregated using DDA would be received into one of two tanks in 241-96H where it would be chemically adjusted to provide optimum conditions for sorption of actinides onto MST. Following the addition of MST, the tank contents would be agitated for a reaction period determined by the curie concentration of the soluble actinides to be removed. The resulting slurry would be transferred to the 512-S facility and into the filter feed tank, where the slurry would be circulated through a cross-flow filter to remove and concentrate the insoluble solids and the MST solids loaded with actinides. The filtration process would yield a clarified salt solution, which would be sent to a filtrate hold tank, and concentrated solids, which would be held in the filter feed tank until washed to remove solid sodium salts. The washed MST slurry, bearing the actinides, would then be transferred to DWPF for vitrification. The clarified salt solution would be transferred to the MCU.

The MCU would be a short-term Cs removal process that would be operated downstream of ARP until the SWPF becomes operational in 2011. The MCU would utilize the same CSSX technology as that to be used by the SWPF but its decontamination capability would be less than that of the SWPF because the MCU would not utilize as many contactors (and thus have less contact surface area) than are planned for the SWPF. The MCU would be limited to processing lower curie concentrations than the SWPF. The CSSX process used in the MCU as in the SWPF would employ an organic solvent to complex with Cs in the waste stream. The solvent and salt solution would then be sent to a bank of centrifugal contactors which would ensure complete

mixing of the waste and solvent, and extraction of the solvent and Cs from the salt waste stream. The Cs would then be stripped from the solvent in another bank of contactors and sent to DWPF for vitrification. The solvent would be recycled, and the decontaminated salt solution would be sent to the Saltstone Production Facility. DOE estimates that the decontaminated salt solution would have a Cs concentration of up to 0.2 Ci/gal. The MCU process is described in greater detail in DOE (2006).

Facility Modifications

Modifications to the Saltstone Production Facility were made to improve reliability, maintainability, operability, and process upset recovery capability that emerged during previous saltstone operations. The facility modifications would provide protection to workers from the increased radiation using DDA only prior to SWPF operation from higher concentrations of cesium (about 0.2 Ci/gal, rather than about 0.1 Ci/gal) and actinides (about 41 nCi/g, rather than <10 nCi/g). Measures to reduce exposure to workers include re-locating the salt solution receipt tank below grade within a shielded dike, and adding shielding at appropriate locations. A new mixer and pump system has been installed in the Saltstone Production Facility process room with shielding adequate to support processing of 0.2 Ci/gal material. This new system will improve the throughput of the process as well as increase its reliability and maintainability. This modification would make recovery from process upsets quicker and easier. Additional shielding has been installed throughout the process room to ensure that worker exposure is maintained as low as reasonably achievable.

The ARP would be comprised of the actinide removal process that was described as part of the pilot plant, which also included a low-capacity CSSX capability, in the SPA SEIS. In order to take advantage of existing infrastructure and minimize construction costs, DOE would complete modifications to existing SRS facilities 512-S (formerly the Late Wash Facility) and 241-96H (formerly the filter building portion of the In-Tank Precipitation facility). The MCU would house a low-capacity CSSX technology, similar to the pilot plant described in the SPA SEIS. The MCU is being constructed in the former cold feeds area of the In-Tank Precipitation facility.

Regulatory Requirements

A modification to the Saltstone Disposal Facility Industrial Solid Waste Landfill (ISWL) permit, issued by the South Carolina Department of Health and Environmental Control (SCDHEC), would be required prior to implementation of Interim Salt Processing. The current Saltstone Disposal Facility ISWL permit authorizes disposal of waste with radionuclide concentrations comparable to Class A low-level waste limits (10 nCi/g) as defined in NRC regulations at 10 CFR 61.55[8]. SCDHEC under its State wastewater permitting authority issued the permit. The permit requires DOE to notify SCDHEC if the characteristics of wastes to be disposed in the Saltstone Disposal Facility would change, as would be the case with the higher concentrations of radionuclides (about 0.2 Ci/gal rather than about 0.1 Ci/gal, and about 41 nCi/g actinides rather than less than 10 nCi/g) in saltstone that would be disposed of if DOE implements Interim Salt Processing before use of the SWPF. DOE has submitted a request for a modification to the

[8] NRC waste classifications are not generally applicable to DOE-generated low-level waste. However, the NRC classification has been used here because it is used in the permit for the Saltstone Disposal Facility.

Saltstone Disposal Facility ISWL permit. The requested modification would cover waste with concentrations less than the NRC Class C limits.

ENVIRONMENTAL IMPACTS

In this section the impacts of implementing Interim Salt Processing followed by High Capacity Salt Processing using the CSSX technology at the SWPF are compared to the impacts of the salt processing alternatives evaluated in the SPA SEIS (DOE 2001).

The DDA process will operate from 2006 until no later than 2011 when the SWPF becomes operational. The DDA process will cease after processing 5.9 Mgal of existing salt waste and 1.0 Mgal of future salt waste. Using DDA, salt waste with a Cs concentration of about 0.2 Ci/gal and an actinide concentration of about 41 nCi/g, totaling about 2.5 MCi, would be sent to the Saltstone Production Facility and then to the Saltstone Disposal Facility.

Salt waste processed through the ARP and MCU, which would operate from 2007 until the SWPF becomes operational, would have a Cs concentration of about 0.1 Ci/gal and an actinide concentration comparable to SWPF waste (i.e., <10 nCi/g) after processing, and would result in about 0.3 MCi processed through the Saltstone Production Facility for disposal at the Saltstone Disposal Facility. These concentrations are the same as those described in the SPA SEIS for salt waste processed using the CSSX technology.

After the SWPF becomes operational in 2011, waste sent to the Saltstone Disposal Facility would have concentrations the same as those evaluated in the SPA SEIS (0.1 Ci/gal Cs and 10 nCi/g actinides), until salt waste processing is completed. In all, implementing Interim Salt Processing followed by High Capacity Salt Processing using the CSSX technology at the SWPF would result in disposal of about 3.0 MCi, or 1.3 % of the total curies contained in the salt waste, at the Saltstone Disposal Facility.

Due to uncertainties in the characterization of the salt waste, the total curies disposed could range up to 5.0 MCi. The uncertainty concerning disposal of 3.0 MCi or up to about 5.0 MCi becomes inconsequential in light of the Direct Disposal in Grout impact analysis found in the SPA SEIS. This alternative would result in the processing and disposal over the operating life estimated in the SPA SEIS of about 13 years (about 2010 to about 2023) of Cs quantities (160 MCi) and concentrations (less than Class C but greater than Class A) much greater than would result from the processing and disposal of Cs using Interim Salt Processing followed by High Capacity Salt Processing through SWPF using the CSSX technology. Cs concentrations processed through the SWPF and the Saltstone Production Facility would be very high (about 2.0 Ci/gal), requiring extensive shielding of facilities and equipment which was assumed in the calculation of impacts in the SPA SEIS.

As shown in the SPA SEIS, however, the short-term impacts of the Direct Disposal in Grout alternative are similar to, and in some cases less than, the short-term impacts of the other alternatives. Direct Disposal in Grout would require very little processing which would reduce the possibility of airborne releases. For this reason, as shown in the SPA SEIS, the short-term

impacts on human health in particular would be less using the Direct Disposal in Grout alternative than if other alternatives were implemented. However, the long-term impacts of the Direct Disposal in Grout alternative are greater than the long-term impacts of the other alternatives, because of the large quantity of Cs that would be disposed of in the Saltstone Disposal Facility. Under each long-term scenario (see below) evaluated in the SPA SEIS, the impacts of the Direct Disposal in Grout alternative are greater than those of the other alternatives. DOE concluded, however, that any of the alternatives evaluated could be implemented with only small and acceptable environmental impacts.

The remainder of this SA addresses the impacts of the processing and disposal of higher concentrations of actinides during Interim Salt Processing than evaluated in the Salt Processing Alternatives SEIS. These higher concentrations would be found in that fraction of the salt waste segregated using the DDA process and sent directly for disposal without treatment in the ARP and MCU.

In the following analysis DOE conservatively assumes the entire salt waste inventory, processed through the SWPF using the CSSX for the operating life of the facility, would be sent to the Saltstone Production Facility with an actinide concentration of 100 nCi/g, the concentration limit for Class C waste (analysis based on Tetra Tech NUS (2003)). However, if Interim Salt Processing is implemented, concentrations would be less, that is, about 41 nCi/g resulting from the DDA process would be sent to the Saltstone Production Facility without treatment in ARP and MCU from 2006 until 2011 when the SWPF becomes operational. DOE estimates that only about 4.8 Mgal or about 6 percent of the total salt waste inventory would have an average concentration of about 41 nCi/g. For this analysis DOE used the same Cs concentration DOE used for the SPA SEIS. The differences in impacts are therefore attributed solely to the increased actinide concentration.

Short-term Impacts

As evaluated in the SPA SEIS, short-term impacts are incurred during operation of the salt waste processing facilities, and long-term impacts are those resulting from release of disposed radionuclides from the Saltstone Disposal Facility. Differences in short-term impacts resulting from implementing the proposed action (Interim Salt Processing followed by SWPF operation using the CSSX technology) would be small compared to operation of the CSSX technology as described in the SPA SEIS. Modifications to the Saltstone Production Facility were completed within the existing structure and result in no new land disturbance. Impacts from construction of the MCU would not differ from those described for the pilot plant in the SPA SEIS. The existing 512-S and 241-96H facilities would be modified for the ARP and would be operated remotely. No adverse impacts are anticipated from construction. Implementation of Interim Salt Processing would not necessitate changes in the design or operation of the SWPF.

There is the potential for short-term impacts to the health of workers and the public due to radiation doses from airborne releases of Cs and actinides from processing activities. See Table 2. For example, the dose to the maximum exposed individual would increase from the 0.31 millirems analyzed under the Caustic Side Solvent Extraction alternative in the SPA SEIS to 0.58 millirems (due to increased actinide concentrations in that portion of the salt waste segregated using DDA

but not treated using ARP and MCU before disposal). Similar small increases would occur in involved worker doses and non-involved worker doses. The 0.31 millirem dose to the maximum exposed individual would result in a probability of a latent cancer fatality of about 2 chances in 1,000,000 (2.0×10^{-6}). The 0.58 millirem dose to the maximum exposed individual would result in a probability of a latent cancer fatality of about 3.7 chances in 1,000,000 (3.7×10^{-6}).

Table 2. Comparison of Airborne Doses and Probabilities of Latent Cancer Fatalities from the SEIS and the Proposed Action, 2006 until salt waste processing is completed [1,2,3]

Receptor	SEIS Solvent Extraction	Proposed Action[4]
MEI (public) Dose (millirem per year)	0.31	0.58
Probability of an LCF from MEI dose	2.0×10^{-6}	3.7×10^{-6}
Noninvolved worker dose (millirem per year)	4.8	6.3
Probability of an LCF from noninvolved worker dose	2.5×10^{-5}	3.3×10^{-5}
Involved worker dose (millirem per year)	23	26
Probability of an LCF from involved worker dose	1.2×10^{-4}	1.4×10^{-4}

[1] Doses represent increment above baseline values from existing SRS activities.
[2] The MEI is 11,800 meters from the facility stacks. The noninvolved worker is located 640 meters from the facility stacks. The involved worker is located 100 meters from the facility stacks. Emissions are assumed to be from a 46 meter stack elevation.
[3] LCFs are calculated for the project duration only, assumed to be 13 years.
[4] Assumes all salt waste (approximately 84 Mgal) to be processed contains up to 100 nCi/g of actinides.

Long-term Impacts

Long-term impacts are described in terms of doses to receptors under certain exposure scenarios. The scenarios and calculations are described in detail in Chapter 4 and Appendix D of the SPA SEIS.

Table 3 compares calculated doses and impacts from the SPA SEIS (the SWPF using the CSSX technology) and the increased actinide concentrations in saltstone that would result from implementing Interim Salt Processing followed by SWPF operation. Three scenarios are used. In the Agricultural Scenario an individual is assumed to unknowingly farm and construct a home on the soil above the Saltstone Disposal Facility. In the Residential Scenarios an individual constructs and lives in a permanent residence on the vaults. At 100 years post-closure a sufficient layer of soil would be present over the still-intact disposal vaults so that the resident would be unaware that the residence was constructed over the vaults. At 1,000 years post-closure the saltstone is assumed to have weathered sufficiently so that the resident could construct a residence without being aware of the presence of the saltstone.

Table 3. Comparison of long-term doses in millirem per year (and latent cancer fatality probability) from SEIS and the Proposed Action

Scenario	Solvent Extraction SEIS	Corrected SEIS Value[1]	Proposed Action[2]
Agricultural at 1,000 years post-closure	110 (3.9×10^{-3})	60 (2.1×10^{-3})	96 (3.4×10^{-3})
Residential at 100 years post-closure	0.1 (3.5×10^{-6})	0.089 (3.1×10^{-6})	0.090 (3.1×10^{-6})
Residential at 1,000 years post-closure	65 (2.3×10^{-3})	17 (6.0×10^{-4})	18[3] (6.4×10^{-4})

[1] A recalculation of certain data from the SPA SEIS (TetraTech NUS 2002) revealed an error in the original calculations that resulted in somewhat higher doses being reported in the SPA SEIS than the analysis actually indicated. The error resulted in higher radionuclide inventories, and therefore higher doses and impacts, than would actually be the case. No other errors were found.

[2] Assumes all salt waste (i.e., approximately 84 Mgal) contains up to 100 nCi/g actinides compared to the Proposed Action under which there would be approximately 6.9 million gallons at an average of about 41 nCi/g actinides. The SPA SEIS assumed 0.2 MCi would be disposed in the Saltstone Disposal Facility under the Caustic Side Solvent Extraction alternative. If DOE implements Interim Salt Processing following by SWPF operation using the CSSX technology, a total of about 3.0 to 5.0 MCi would be disposed of in the Saltstone Disposal Facility. Because Cs represents most of these curies, impacts of cesium are bounded by the SPA SEIS analysis of the Direct Disposal in Grout alternative and the uncertainty regarding 3.0 to 5.0 MCi is inconsequential.

[3] A 2005 Special Analysis documented in the Section 3116 Determination assessed the impact to a resident intruder from the salt waste projected to be disposed in the Saltstone Disposal Facility. DOE conservatively assumed in the analysis that the entire inventory (3.0 MCi) of low-activity salt waste, after treatment using DDA, ARP and MCU, and SWPF, would be contained in one vault. The resulting maximum estimated dose over the period ending 10,000 years after closure would be 21.7 mrem per year (WSRC 2005). Additional sensitivity analysis was performed on the Special Analysis and was documented in the Section 3116 Determination.

Under the Agricultural Scenario, the doses and latent cancer fatalities resulting from Interim Salt Processing followed by SWPF operation using the CSSX technology as shown under the Proposed Action column in Table 3 increase slightly compared to the corrected SEIS values (as explained in footnote 3 to Table 3). Under the Residential Scenario at 100 years, impacts from Interim Salt Processing followed by SWPF operation using the CSSX technology would be comparable to the CSSX alternative analyzed in the SPA SEIS. For the Residential Scenario at 100 years doses are dominated by Cs, which has largely decayed by 1,000 years post-closure.

If Interim Salt Processing followed by SWPF operation using the CSSX technology is implemented, waste with a concentration of about 41 nCi/g resulting from the DDA process without ARP and MCU treatment would be sent to the Saltstone Disposal Facility until the SWPF becomes operational. Using ARP and throughout the operating life of the SWPF, salt waste sent to

the Saltstone Disposal Facility would have actinide concentrations of 10 nCi/g or less. Long-term impacts would be less than indicated in Table 3 if DOE implements Interim Salt Processing followed by SWPF because the actual inventory of actinides disposed of in the Saltstone Disposal Facility would be less than assumed in the calculation.

CONCLUSIONS

The potential impacts from implementation of Interim Salt Processing followed by SWPF operation using the CSSX technology are not substantially different than the impacts identified in the CSSX alternative described in the SPA SEIS. If Interim Salt Processing followed by High Capacity Salt Processing through SWPF operation using the CSSX technology is implemented, about 3.0 MCi of primarily Cs would be processed and disposed of in the Saltstone Disposal Facility. Under the Direct Disposal in Grout alternative evaluated in the SPA SEIS, about 160 MCi of primarily Cs would be disposed of in the Saltstone Disposal Facility. Therefore the short term and long term impacts of Cs processing and disposal described in the SPA SEIS for Direct Disposal in Grout are greater than the impacts of cesium disposal that would result from implementation of Interim Salt Processing followed by High Capacity Salt Processing followed by SWPF operation using the CSSX technology, which would remove most of the Cs prior to solidification and disposal in the Saltstone Disposal Facility.

The SPA SEIS analysis for each action alternative was based on the assumption that an actinide removal process would be used prior to processing the salt waste in the Saltstone Production Facility and actinides would be disposed of at concentrations comparable to Class A low-level waste (10 nCi/g for alpha-emitting nuclides with half lives greater than 5 years). If DOE implements Interim Salt Processing, the actinide removal step would not be applied to a limited quantity of salt waste if the resultant concentrations in saltstone would allow the waste form to meet the waste acceptance criteria for Class C low-level waste established by the Industrial Solid Waste Landfill permit for the Saltstone Disposal Facility. The evaluation in this SA shows that impacts of actinide disposal at concentrations significantly greater than those evaluated in the SPA SEIS would be only very slightly greater in both the short term and in the long term, than shown in the SPA SEIS.

DETERMINATION

The results of this SA indicate that the activities and potential environmental impacts associated with the implementation of Interim Salt Processing are not substantially different than those analyzed in DOE/EIS-0082-S2, Salt Processing Alternatives Final Supplemental Environmental Impact Statement. In the SEIS, DOE evaluated the impacts of disposing of the entire high-level waste tank farm inventory of cesium (about 160 MCi), and of actinides at concentrations up to about 10 nCi/g, in the Saltstone Disposal Facility. Interim Salt Processing followed by SWPF operation using the CSSX technology would result in disposal of approximately 3.0 MCi of salt waste, with actinides concentrations of about 41 nCi/g in about 6.9 Mgal of the salt waste, in the Saltstone Disposal Facility. Interim Salt Processing would not constitute substantial changes in the proposed action that are relevant to environmental concerns or significant new circumstances

or information relevant to environmental concerns and bearing on the proposed action or its impacts. Therefore, DOE does not need to undertake additional NEPA analysis.

Issued in Washington, DC this 17th day of January 2006.

James A. Rispoli
Assistant Secretary for Environmental Management

REFERENCES

Tetra Tech NUS, 2002. Calculation Package for Selected Tables in Savannah River Site Salt Processing Alternatives Final Supplemental Environmental Impact Statement. AIK-02-0196. Aiken, South Carolina. June 2002.

Tetra Tech NUS, 2003. Calculation of Impacts from Increased Actinide Concentrations in the Salt Processing Alternatives Based on the Savannah River Site Salt Processing Alternatives Final Supplemental Environmental Impact Statement. AIK-03-0251, Rev.1. Aiken, South Carolina. October 2003.

U.S. Department of Energy (DOE), 2001. Salt Processing Alternatives Final Supplemental Environmental Impact Statement, DOE/EIS-0082-S2. Aiken, South Carolina. June 2001.

U.S. Department of Energy (DOE), 2005. Draft Section 3116 Determination for Salt Waste Disposal at the Savannah River Site. DOE-WD-2005-001. February 2005.

U.S. Department of Energy (DOE), 2006. Section 3116 Determination for Salt Waste Disposal at the Savannah River Site. DOE-WD-2005-001. January 2006.

Westinghouse Savannah River Company (WSRC), 2005. Special Analysis: Revision of Saltstone Vault 4 Disposal Limits. Cook, J. R., Wilhite, E.L., Hiergesell, R. A., and Flach, G. P. WSRC-TR-2005-00074.