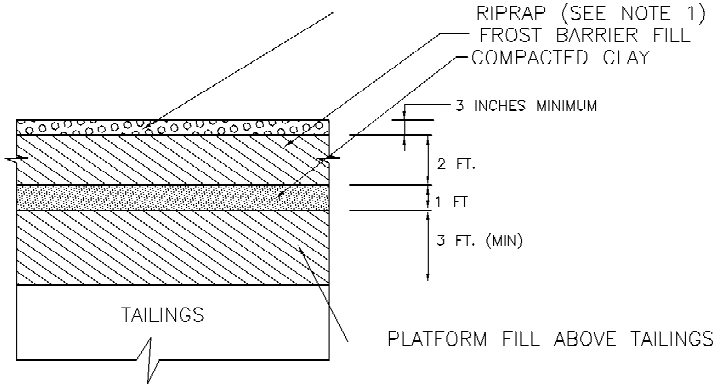

COVER DETAIL FOR POND SURFACE AREAS
(NOT TO SCALE)

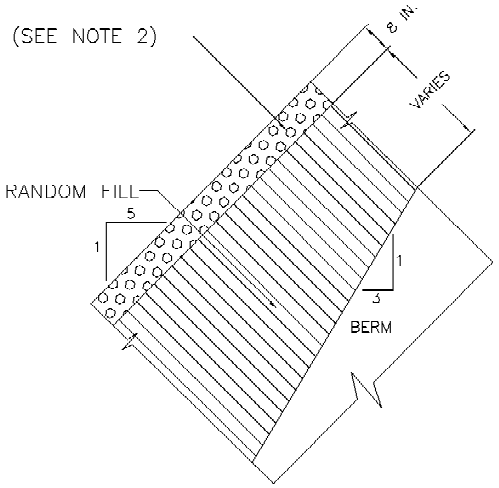

COVER DETAIL FOR SIDE SLOPES
(NOT TO SCALE)

NOTES:

1. RIPRAP PLACED ON THE TOP OF COVER WILL CONSIST OF ROCK WITH D50 MINIMUM OF 3 INCHES.
2. RIPRAP PLACED ON THE SIDE SLOPES OF COVER WILL CONSIST OF ROCK WITH D50 MINIMUM OF 3.5 INCHES.

REFERENCE:
INTERNATIONAL URANIUM (USA) CORPORATION, (2003)

N:\MOA\999\0005\02\014\X00452\X0045200.DWG 09/23/03 2:28pm J50191 X0045200

Figure 2–39. White Mesa Mill Typical Reclamation Cover